Panasonic ideas for life

SPEC FILE

Product Number : PT-**DX500**

Product Name : DLP™ Projector

As of May 2011. Specifications and appearance are subject to change without notice.

SFD10M014-1

Specifications

Main unit

Power supply		100–240 V AC, 5.0–1.9 A, 50/60 Hz
Power consumption		415 W (500 VA) (0.3 W at 100–120 V AC, 0.4 W at 220–240 V AC with standby mode set to eco*1, 15 W with standby mode set to normal. Both with fan stopped.)
DLP™ chip	Panel size	17.8 mm (0.70 inches) diagonal (4:3 aspect ratio)
	Display method	DLP™ chip × 1, DLP™ system
	Pixels	786,432 (1,024 × 768) × 1, total of 786,432 pixels
Lens		Manual zoom (2× zoom), manual focus F 2.0–3.4, f 21.5–43.0 mm
Throw ratio	4:3 aspect ratio	1.51–3.05:1
Lamp		300 W (max. 310 W) UHM lamp
Screen size		1.02–7.62 m (40–300 inches), 4:3 aspect ratio
Brightness*2		4,500 lumens (lamp mode: normal)
Center-to-corner uniformity*2		90%
Contrast*2		2,000:1 (full on/full off)
Resolution		1,024 × 768 pixels (Input signals that exceed this resolution will be converted to 1,024 × 768 pixels.)
Scanning frequency	HDMI/DVI-D	f_H: 27 kHz–100 kHz, f_V: 24 Hz–120 Hz, dot clock: 25 MHz–162 MHz
	RGB	f_H: 15 kHz–100 kHz, f_V: 24 Hz–120 Hz, dot clock: 162 MHz or lower
	YP_BP_R (YC_BC_R)	480i (525i): f_H 15.75 kHz; f_V 60 Hz, 576i (625i): f_H 15.63 kHz; f_V 50 Hz, 480p (525p): f_H 31.50 kHz; f_V 60 Hz, 576p (625p): f_H 31.25 kHz; f_V 50 Hz, 720 (750)/60p: f_H 45.00 kHz; f_V 60 Hz, 720 (750)/50p: f_H 37.50 kHz; f_V 50 Hz, 1035/60i: f_H 33.75 kHz; f_V 60 Hz, 1080 (1125)/60i: f_H 33.75 kHz; f_V 60 Hz, 1080 (1125)/50i: f_H 28.13 kHz; f_V 50 Hz, 1080/25p: f_H 28.13 kHz; f_V 25 Hz, 1080/24p: f_H 27.00 kHz; f_V 24 Hz, 1080/24sF: f_H 27.00 kHz; f_V 48 Hz, 1080/30p: f_H 33.75 kHz; f_V 30 Hz, 1080/60p: f_H 67.50 kHz; f_V 60 Hz, 1080/50p: f_H 56.25 kHz; f_V 50 Hz
	Video/S-Video	f_H: 15.75 kHz, f_V: 60 Hz [NTSC/NTSC4.43/PAL-M/PAL60] f_H: 15.63 kHz, f_V: 50 Hz [PAL/PAL-N/SECAM]
Optical axis shift		Vertical: +60% (manual), horizontal: ±10% (manual)
Keystone correction range		Vertical: ±40°
Installation		Ceiling/floor, front/rear
Terminals	HDMI IN	HDMI 19-pin × 1, Deep Color, HDCP compatible 480p, 576p, 720/60p, 720/50p, 1080/60i, 1080/50i, 1080/24p, 1080/24sF, 1080/25p, 1080/30p, 1080/60p, 1080/50p VGA (640 × 480)–WUXGA (1,920 × 1,200), compatible with non-interlaced signals only, dot clock: 25 MHz–162 MHz Audio signal: linear PCM (sampling frequencies: 48 kHz, 44.1 kHz, 32 kHz)
	DVI-D IN	DVI-D 24-pin × 1, DVI 1.0 compliant, HDCP compatible, for single link only 480p, 576p, 720/60p, 720/50p, 1080/60i, 1080/50i, 1080/24p, 1080/24sF, 1080/25p, 1080/30p, 1080/60p, 1080/50p VGA (640 × 480)–WUXGA (1,920 × 1,200), compatible with non-interlaced signals only, dot clock: 25 MHz–162 MHz
	RGB 1 IN	BNC × 5
	R, G, B	R: 0.7 Vp-p, 75 ohms, G: 0.7 Vp-p (G: 1.0 Vp-p for sync on G), 75 ohms, B: 0.7 Vp-p, 75 ohms HD/VD, SYNC: High impedance, TTL (positive/negative) **NOTE: SYNC/HD and VD terminals do not accept tri-level sync signals.**
	Y, P_B, P_R (Y, C_B, C_R)	Y: 1.0 Vp-p (including sync signal), P_B/P_R (C_B/C_R): 0.7 Vp-p, 75 ohms

Downloaded from www.Manualslib.com manuals search engine

	RGB 2 IN	D-sub HD 15-pin × 1
	R, G, B	R: 0.7 Vp-p, 75 ohms, G: 0.7 Vp-p (G: 1.0 Vp-p for sync on G), 75 ohms, B: 0.7 Vp-p, 75 ohms HD/VD, SYNC: High impedance, TTL (positive/negative) **NOTE: SYNC/HD and VD terminals do not accept tri-level sync signals.**
	Y, PB, PR (Y, CB, CR)	Y: 1.0 Vp-p (including sync signal), PB/PR (CB/CR): 0.7 Vp-p, 75 ohms
	VIDEO IN	BNC × 1, 1.0 Vp-p, 75 ohms
	S-VIDEO IN	Mini DIN 4-pin × 1, Y: 1.0 Vp-p, C: 0.286 Vp-p, 75 ohms
	AUDIO IN 1	RCA × 2 (L, R × 1), 0.5 Vrms
	AUDIO IN 2	M3 × 1 (L, R × 1), 0.5 Vrms
	AUDIO IN 3	M3 × 1 (L, R × 1), 0.5 Vrms
	AUDIO OUT	M3 × 1 (L, R × 1) (monitor out: 0–2.0 Vrms, variable)
	SERIAL IN	D-sub 9-pin × 1 for external control (RS-232C compliant)
	REMOTE IN	D-sub 9-pin × 1 for external control (parallel)
	LAN	RJ-45 × 1 for network connection, 100Base-TX/10Base-T, compliant with PJLink™
	WIRELESS MODULE	Connector for optional wireless module ET-WM200U/WM200E × 1
Power cord length		3.0 m (9 ft 10 in)
Cabinet materials		Molded plastic (PC + ABS)
Dimensions (W × H × D)		332 mm × 168 mm*3 × 484.5 mm*4 (13-1/16″ × 6-5/8″ *3 × 19-1/16″ *4)
Weight		Approx. 8.5 kg (18.7 lbs)
Operating temperature		0°–45°C (32°–113°F)
Operating humidity		20%–80% (no condensation)

Remote control unit

Power supply	3 V DC (R6/LR6/AA type battery × 2)
Operation range*5	Approx. 15 m (49 ft 3 in) when operated from directly in front of the signal receptor
Dimensions (W × H × D)	48 × 163 × 24.5 mm (1-7/8″ × 6-13/32″ × 31/32″)
Weight	Approx. 117 g (4.1 oz) (including batteries)

Supplied accessories

Power cord with security lock (× 1)
Wireless remote control unit (× 1)
Batteries for remote control (R6/LR6/AA type × 2)
Wire rope (× 1)
Software CD-ROM (Logo Transfer Software, Multi Projector Monitoring and Control Software Ver. 2, Wireless Manager ME 5.5) (× 1)

Optional accessories

Replacement lamp unit	ET-LAD60A ET-LAD60AW (Twin Pack)
Ceiling mount bracket	ET-PKD110H (for high ceilings) ET-PKD110S (for low ceilings)
Wireless module	ET-WM200U (for North America) ET-WM200E (for Europe and Asia)

Weights and dimensions shown are approximate. Specifications and appearance are subject to change without notice.
***1 When the standby mode is set to eco, network functions such as power on over the LAN network will not operate. Also, only certain commands can be received for external control using the serial terminal.**
***2 Measurement, measuring conditions, and method of notation all comply with ISO 21118 international standards.**
***3 Compliant with VESA CVT-RB.**
***4 With legs at shortest position.**
***5 Including the lens.**
***6 Operation range differs depending on environments.**
***7 The operation system must be pre-installed at the factory or clean installed.**

Downloaded from www.Manualslib.com manuals search engine

Dimensions

unit : mm (inch)
NOTE: This illustration is not drawn to scale.

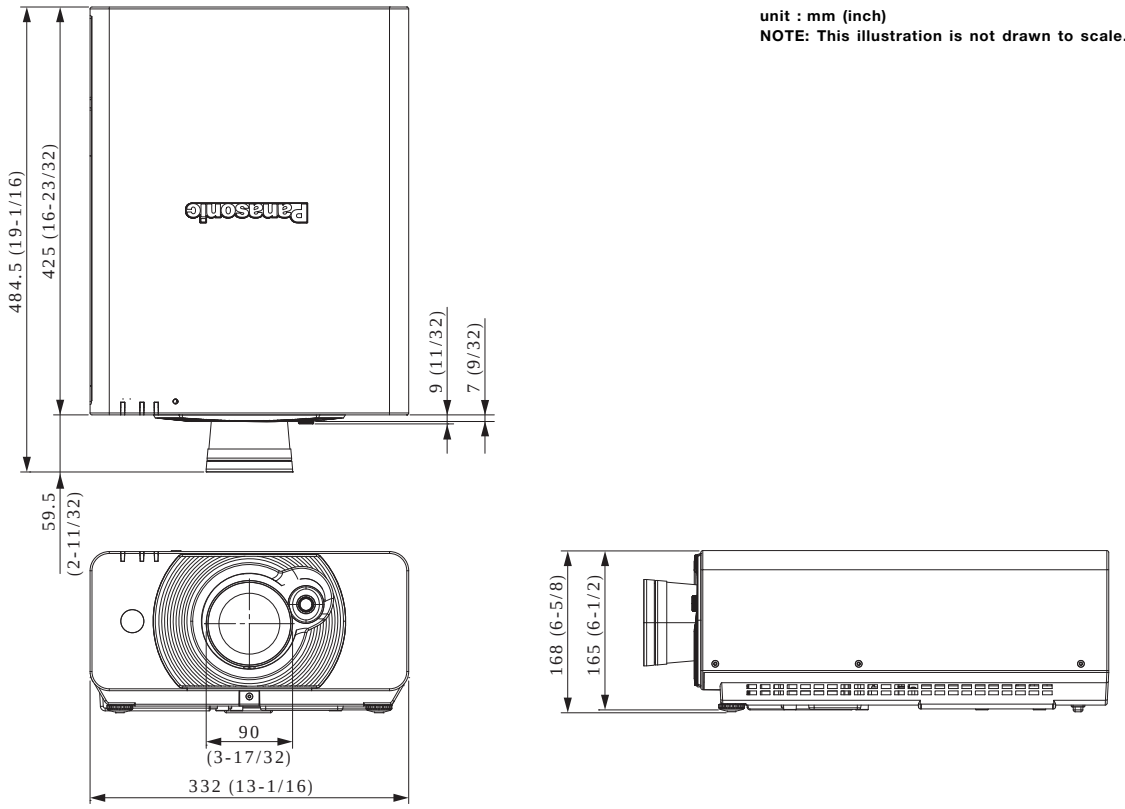

Terminals

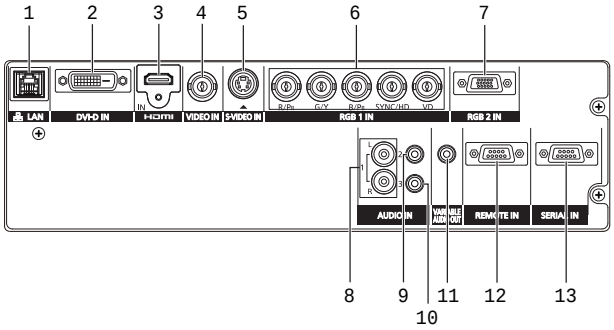

1	LAN connector	8	Audio 1 input
2	DVI-D input	9	Audio 2 input
3	HDMI input	10	Audio 3 input
4	Video input	11	Audio output
5	S-Video input	12	Remote input
6	RGB 1 input	13	Serial input
7	RGB 2 Input		

Downloaded from www.Manualslib.com manuals search engine

Standard setting-up position

** Adjustable in 40 mm (1-9/16˝) steps.

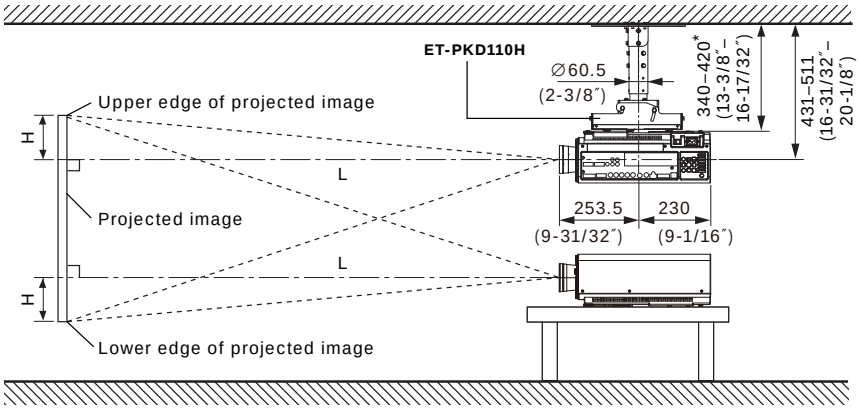

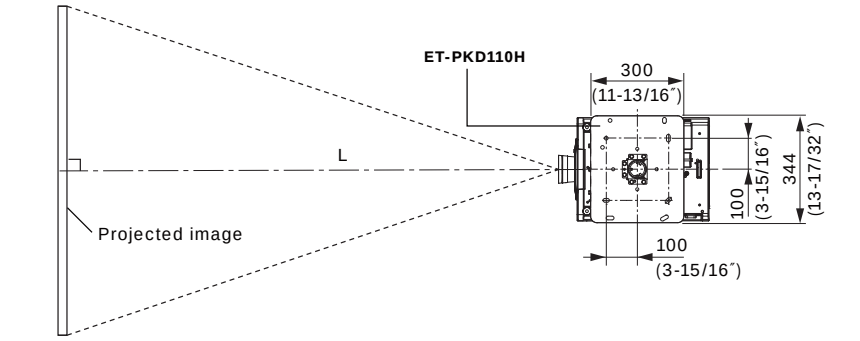

NOTE:

Illustrations show the projector installed using optional ceiling mount bracket.

This illustration is not drawn to scale.

unit : mm (inch)

Caution:

- All construction work should be done by a qualified technician.
- When mounting to the ceiling, use the special mounting bracket. To prevent the projector from swaying or dropping, attach the wire that is included with the projector between the mounting bracket and the ceiling.

Downloaded from www.Manualslib.com manuals search engine

Projection distance for 4:3 aspect ratio screen

unit: meters (feet)

Projection size [diagonal]	Projection distance [L] Min [wide]		Max [telephoto]		Height from the edge of screen to center of lens [H]	
1.02 m / 40″	1.20	(4.0)	2.46	(8.0)	-0.06 – 0.31	(-0.2 – 1.0)
1.27 m / 50″	1.51	(5.0)	3.08	(10.1)	-0.08 – 0.38	(-0.2 – 1.3)
1.52 m / 60″	1.82	(6.0)	3.70	(12.1)	-0.09 – 0.46	(-0.3 – 1.5)
1.78 m / 70″	2.14	(7.1)	4.33	(14.1)	-0.11 – 0.53	(-0.4 – 1.7)
2.03 m / 80″	2.45	(8.1)	4.95	(16.2)	-0.12 – 0.61	(-0.4 – 2.0)
2.29 m / 90″	2.76	(9.1)	5.58	(18.2)	-0.14 – 0.69	(-0.4 – 2.3)
2.54 m / 100″	3.08	(10.1)	6.20	(20.3)	-0.15 – 0.76	(-0.5 – 2.5)
3.05 m / 120″	3.70	(12.2)	7.45	(24.4)	-0.18 – 0.91	(-0.6 – 3.0)
3.81 m / 150″	4.64	(15.3)	9.32	(30.5)	-0.23 – 1.14	(-0.8 – 3.8)
5.08 m / 200″	6.21	(20.4)	12.44	(40.8)	-0.31 – 1.52	(-1.0 – 5.0)
6.35 m / 250″	7.77	(25.5)	15.56	(51.0)	-0.38 – 1.91	(-1.3 – 6.3)
7.62 m / 300″	9.34	(30.7)	18.68	(61.2)	-0.46 – 2.29	(-1.5 – 7.5)

NOTE:

- **The value for L (distance to screen) varies slightly within ±5% depending on the zoom lens characteristics.**
- **At the shortest projection distance, the zoom lens characteristics may cause slight image distortion.**
- **When vertical keystone correction is used, the image is corrected in the direction that reduces its projected size.**
- **The brightness varies depending on the zoom setting.**

Calculation of the projection distance

For a screen size different from the above, use the equation below to calculate the projection distance.

Aspect ratio 4:3

minimum L (m) = (diagonal screen size in inches) × 0.0313 – 0.0546

maximum L (m) = (diagonal screen size in inches) × 0.0624 – 0.0408

NOTE: Distances calculated with the above equations will include a slight error.

Downloaded from www.Manualslib.com manuals search engine

Shift range

Optical axis shift function allows to shift the position of a projected image as shown below.

• Floor mount

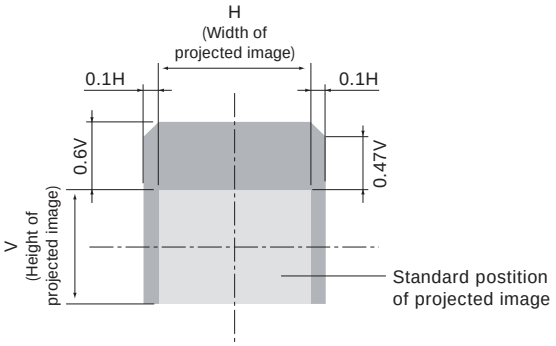

• Ceiling mount

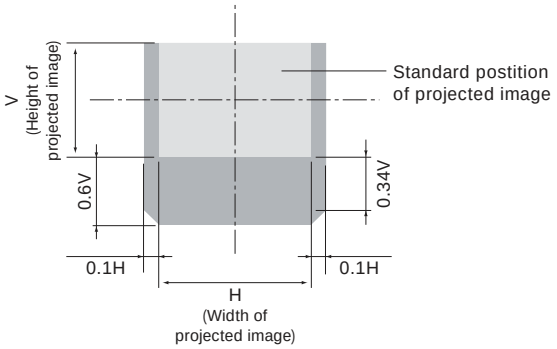

Installable angle

Install the projector at an angle within the range shown below.

• Vertical direction
The projector may be installed at a vertical angle of 360°.

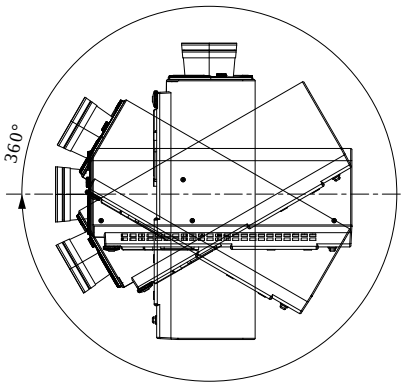

• Horizontal direction
The projector may be installed at a horizontal angle of ±15°.

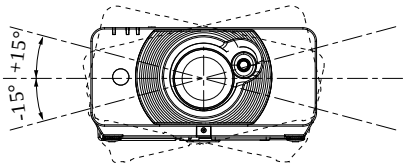

Downloaded from www.Manualslib.com manuals search engine

List of compatible signals

The signals that can be input to this projector are shown in the table below. Horizontal scanning frequencies of 15 kHz to 100 kHz, vertical scanning frequencies of 24 Hz to 120 Hz, and a dot clock of 162 MHz maximum can be input.

NOTE: The native resolution of this projector is 1,920 × 1,200 pixels. If the display resolution of the input signal is different from the native resolution, image compression or expansion will be used to convert the input signal to a level within the native resolution.

Display mode	Display resolution (dots)*1	Scanning frequency H (kHz)	Scanning frequency V (kHz)	Dot clock frequency (MHz)	Format
NTSC/NTSC4.43/PAL-M/PAL60	720 × 480i	15.7	59.9	–	VIDEO/S-VIDEO
PAL/PAL-N/SECAM	720 × 576i	15.6	50.0	–	
480i (525i)	720 × 480i	15.7	59.9	13.5	SDI/RGB/YPBPR
576i (625i)	720 × 576i	15.6	50.0	13.5	
480p (525p)	720 × 483	31.5	59.9	27.0	HDMI/DVI-D/
576p (625p)	720 × 576	31.3	50.0	27.0	RGB/YPBPR
720/60p	1280 × 720	45.0	60.0	74.3	
720/50p	1280 × 720	37.5	50.0	74.3	
1080/60i	1920 × 1080i	33.8	60.0	74.3	
1080/50i	1920 × 1080i	28.1	50.0	74.3	
1080/24p	1920 × 1080	27.0	24.0	74.3	
1080/24sF	1920 × 1080i	27.0	24.0	74.3	
1080/25p	1920 × 1080	28.1	50.0	74.3	
1080/30p		33.8	60.0	74.3	
1080/60p		67.5	60.0	148.5	
1080/50p		56.3	50.0	148.5	
VGA400	640 × 400	31.5	70.1	25.2	HDMI/DVI-D/RGB
		37.9	85.1	31.5	
VGA480	640 × 480	31.5	59.9	25.2	
		35.0	66.7	30.2	
		37.9	72.8	31.5	
		37.5	75.0	31.5	
		43.3	85.0	36.0	
SVGA	800 × 600	35.2	56.3	36.0	
		37.9	60.3	40.0	
		48.1	72.2	50.0	
		46.9	75.0	49.5	
		53.7	85.1	56.3	
MAC16	832 × 624	49.7	74.6	57.3	
XGA	1024 × 768	39.6	50.0	51.9	
		48.4	60.0	65.0	
		56.5	70.1	75.0	
		60.0	75.0	78.8	
		65.5	81.6	86.0	
		68.7	85.0	94.5	
		80.0	100.0	105.0	
		96.7	120.0	130.0	
MXGA	1152 × 864	53.7	60.0	81.6	
		64.0	71.2	94.2	
		67.5	74.9	108.0	
		76.7	85.0	121.5	
MAC21	1152 × 870	68.7	75.1	100.0	
1280 × 720	1280 × 720	37.1	49.8	60.5	
		44.8	59.9	74.5	
1280 × 768	1280 × 768	39.6	49.9	65.3	
		47.8	59.9	79.5	
1280 × 768*2		47.4	60.0	68.3	
1280 × 768		60.3	74.9	102.3	
		68.6	84.8	117.5	

***1 The "i" appearing after the resolution indicates an interlaced signal.**
***2 Compliant with VESA CVT-RB (Coordinated Video Timing-Reduced Blanking).**

Downloaded from www.Manualslib.com manuals search engine

Display mode	Display resolution (dots)*1	Scanning frequency H (kHz)	Scanning frequency V (kHz)	Dot clock frequency (MHz)	Format
1280 × 800	1280 x 800	41.3	50.0	68.0	HDMI/DVI-D/RGB
		49.7	59.8	83.5	
1280 × 800*2		49.3	59.9	71.0	
1280 × 800		62.8	74.9	106.5	
		71.6	84.9	122.5	
MSXGA	1280 x 960	60.0	60.0	108.0	
SXGA	1280 × 1024	52.4	50.0	88.0	
		64.0	60.0	108.0	
		72.3	66.3	125.0	
		78.2	72.0	135.1	
		80.0	75.0	135.0	
		91.1	85.0	157.5	
1366×768	1280 × 768	47.7	59.8	84.8	
		39.6	49.9	69.0	
SXGA+	1400 × 1050	54.1	50.0	99.9	
		64.0	60.0	108.0	
		65.2	60.0	122.6	
		65.3	60.0	121.8	
		78.8	72.0	149.3	
		82.2	75.0	155.9	
WXGA+	1440 × 900	55.9	59.9	106.5	
		46.3	49.9	86.8	
UXGA60	1600 × 1200	75.0	60.0	162.0	
WSXGA+	1680 × 1050	65.3	60.0	146.3	
		54.1	50.0	119.5	
1920×1080	1920 × 1080	55.6	49.9	141.5	
1920×1080*2		66.6	59.9	138.5	
1920×1080		67.2	60.0	173.0	RGB
WUXGA	1920 × 1200	61.8	49.9	158.3	HDMI/DVI-D/RGB
WUXGA*2		74.0	60.0	154.0	
WUXGA		74.6	59.9	193.3	RGB

*1 The "i" appearing after the resolution indicates an interlaced signal.
*2 Compliant with VESA CVT-RB (Coordinated Video Timing-Reduced Blanking

Downloaded from www.Manualslib.com manuals search engine

Serial connector

The serial connector complies with RS-232C. To control the projector from a personal computer, commands must be input through communication software, based on the format and satisfying the communication conditions shown below.

Pin assignments and signal names

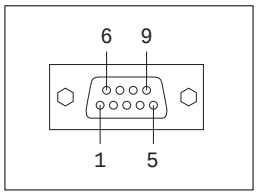

D-sub 9-pin (female)
Serial input

No.	Signal name	Description	No.	Signal name	Description
1	–	NC	6	–	NC
2	TXD	Send data	7	CTS	Connected internally
3	RXD	Receive data	8	RTS	Connected internally
4	–	Connected internally	9	–	NC
5	GND	Ground			

Communication conditions (factory setting)

Signal level	RS-232C-compliant
Synchronization method	Start-stop synchronization
Baud rate	9,600 bps
Parity	None
Character length	8 bits
Stop bit	1 bit
X parameter	None
S parameter	None

Basic format

Transmission from the computer begins with STX, then the ID, command, parameter, and ETX are sent in this order. Add parameters according to the details of control.

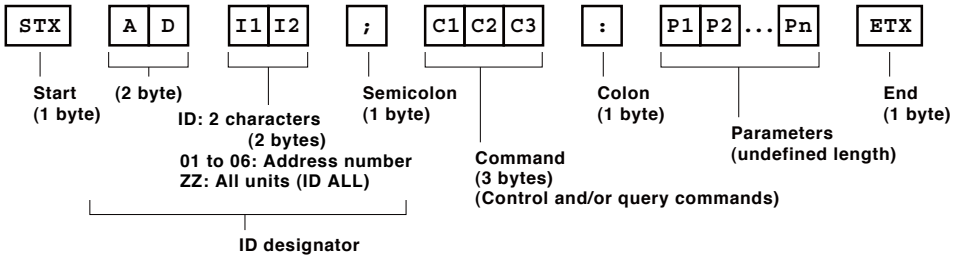

CAUTION

- **It may not be possible to send or receive commands for about 10 to 60 seconds when the lamp is first turned on. If this occurs, wait for 60 seconds, then try sending or receiving again.**
- **When sending multiple commands, be sure to wait for at least 0.5 second after receiving a response from the projector before sending the next command.**
- **Additional time is sometimes required for response due to processing inside the projector. Set the time-out period for command response to 10 seconds or more.**
- **When using two or more units, set different IDs for each unit.**

Downloaded from www.Manualslib.com manuals search engine

Cable specifications

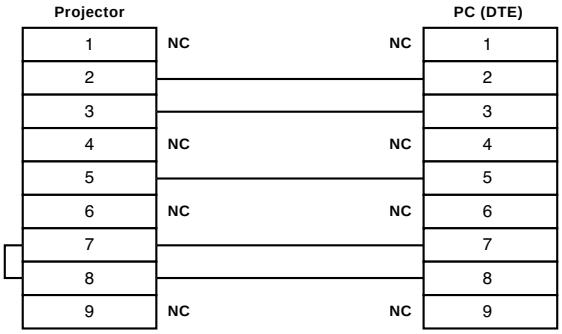

Control commands

Command : Parameter	Function		Callback
PON	POWER (STANDBY)	Standby power on	**PON**
POF		Standby power off	**POF**
IIS:HD1	INPUT SELECT	HDMI	**IIS:HD1**
IIS:DVI		DVI	**IIS:DVI**
IIS:RG1		RGB 1	**IIS:RG1**
IIS:RG2		RGB 2	**IIS:RG2**
IIS:NWP		Network	**IIS:NWP**
IIS:VID		Video	**IIS:VID**
IIS:SVD		S-Video	**IIS:SVD**
OSH:0	AV MUTE	Off	**OSH:0**
OSH:1		On	**OSH:1**
OFZ:0	FREEZE	Off	**OFZ:0**
OFZ:1		On	**OFZ:1**
OAS	AUTO SETUP		**OAS**
VPM:NAT	PICTURE MODE	Natural	**VPM:NAT**
VPM:STD		Standard	**VPM:STD**
VPM:DYN		Dynamic	**VPM:DYN**
VPM:CIN		Cinema	**VPM:CIN**
VPM:GRA		Graphic	**VPM:GRA**
VPM:DIC		DICOM	**VPM:DIC**
VPM:709		Rec. 709	**VPM:709**
OTE:1	COLOR TEMPERATURE	Middle	**OTE:1**
OTE:2		High	**OTE:2**
OTE:4		User	**OTE:4**
OTE:10		Default	**OTE:10**
TSD:y1y2y3y4m1m2d1d2w*1	DATE	Date setting	**TSD:y1y2y3y4m1m2d1d2w***1
TST:h1h2m1m2s1s2	TIME	Time setting	**TST:h1h2m1m2s1s2**
OOS:0	ON SCREEN	On-screen display off	**OOS:0**
OOS:1		On-screen display on	**OOS:1**

*1 w: day of week: Monday = 1, Tuesday = 2, ... Sunday = 7

NOTE:
- **Do not send PON, POF or OSH commands continuously in a short period of time. Doing so may burst the lamp or shorten the lamp replacement cycle.**
- **When a command that cannot be executed during standby mode is sent, the projector will send an ER401 command in reply.**

Downloaded from www.Manualslib.com manuals search engine

Status request commands

Command:Parameter	Function	Callback	Description
QPW	Main power status	000	Standby (Off)
		001	On
QIN	Input signal status	HD1	HDMI
		DVI	DVI
		RG1	RGB 1
		RG2	RGB 2
		NWP	Network
		VID	Video
		SVD	S-Video
QSH	AV mute function status	0	Off
		1	On
QFZ	Freeze function status	0	Off
		1	On
QOS	On-screen display status	0	Off
		1	On
QST	Projector run time	p1p2p3p4p5	00000h–99999h
Q$L	Lamp run time	p1p2p3p4	0000h–9999h
QLP	Lamp power mode status	0	Normal
		1	Eco
QPM	Picture mode status	NAT	Natural
		STD	Standard
		DYN	dynamic
		CIN	Cinema
		GRA	Graphic
		DIC	DICOM
		709	Rec. 709
QTM:0	Temperature status	p1p2p3p4/p5p6p7p8*1	p0 = Intake air
QTM:1			p1 = Around lamp
QTM:2			p2 = Optics module
QGD	Date setting status	y1y2y3y4m1m2d1d2w	yyyymmddw*2
QGT	Time setting status	h1h2m1m2s1s2	hhmmss

*1 p1p2p3p4: Celsius (°C), p5p6p7p8: Fahrenheit (°F)
*2 w: day of week: Monday = 1, Tuesday = 2, ... Sunday = 7

NOTE: If a wrong command is received, the projector will send an ER401 or ER402 command to the computer.

Command example

To set the on-screen display off, send the command as shown below.

STX	ADZZ	;	OOS	:	0	ETX
Start	ID Address		Command		Parameter	End

NOTE: When sending commands without parameters, a colon (:) is not necessary.

Downloaded from www.Manualslib.com manuals search engine

Notes on projector placement and operation

The projector uses a high-wattage lamp that becomes very hot during operation. Please observe the following precautions.

1. Never place objects on top of the projector while it is operating.
2. Make sure there is an unobstructed space of 500 mm (19-11/16″) or more around the projector's exhaust openings.
3. Do not stack projector units directly on top of one another. If two units must be stacked for back-up use in ordinary projection, use a method as shown below and provide ample space between the units to ensure that exhaust heat does not accumulate near the intake opening or around the units. Dual stacked projection is not recommended.
4. Make sure that nothing blocks the projector's air intake and exhaust openings. Also, install the projector so that cool or hot air from other air conditioning equipment does not flow directly toward the projector's air intake or exhaust openings.
5. Do not install the projector in an enclosed space. If it is necessary to install it in an enclosed space, add a separate ventilation system. If ventilation is insufficient, hot air will accumulate at the intake opening. This may cause the projector's protective circuit to interrupt projector operation.
6. If the projector is installed in an enclosed space, ensure that the temperature of the air surrounding the projector is between 0°C (32°F) and 40°C (104°F). Also make sure that the projector's intake and exhaust openings are not blocked. Even though the air surrounding the projector is 40°C (104°F) or less, if hot exhaust air accumulates inside the space, it may cause the projector's protective circuit to interrupt projector operation. Pay particular attention to the surrounding temperature conditions when planning the installation.
7. When installing the projector in any manner other than floor mounting with the adjuster legs, use the five threaded ceiling mount holes (screw diameter: M4, projector interior thread length: 7 mm) to secure the projector. Also, provide a 5- to 10-mm (3/16″ to 13/32″) space between the projector and the mounting surface by inserting metal spacers.

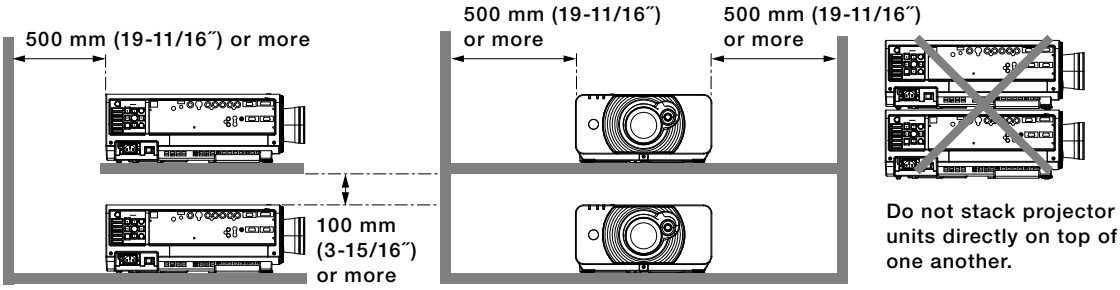

Downloaded from www.Manualslib.com manuals search engine

Direction of air intake and exhaust

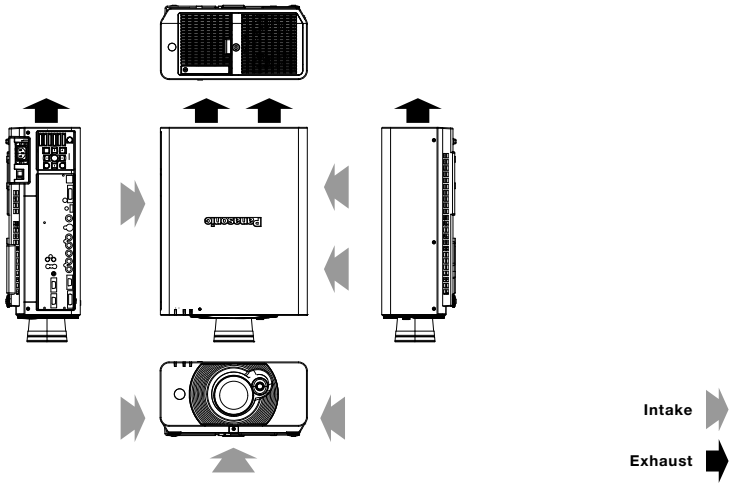

Operating the projector continuously

1. If the projector is to be operated continuously 22 hours or more, lamp replacement cycle duration becomes shorter.
2. The lamp replacement cycle duration becomes shorter if the projector is operated repeatedly for short periods (one hour or less).

Weights and dimensions shown are approximate. Specifications and appearance are subject to change without notice.
Product availability differs depending on region and country. This product may be subject to export control regulations.

DLP and the DLP logo are trademarks of Texas Instruments.
PJLink is a registered trademark, or a trademark application has been filed, in Japan, the United States, and other countries and regions.
All other trademarks are the property of their respective trademark owners.